Proceedings of 2018 IEEE
International Conference on Mechatronics and Automation
August 5 - 8, Changchun, China

# Structure Improvement and Stability for an Amphibious Spherical Robot

Liang Zheng [1,2], Shuxiang Guo[3,4] ,Shuoxin Gu[1]

[1]*Graduate School of Engineering, Kagawa University, Takamatsu, Kagawa 761-0396, Japan*

[2]*JiLin Agricultural Science and Technology University Jilin, Jilin, China,132101*

[3]*Department of Intelligent Mechanical Systems Engineering, Kagawa University, Takamatsu, Kagawa 761-0396, Japan*

[4]*Key Laboratory of Convergence Medical Engineering and System and Healthcare Technology, the Ministry of Industry Information Technology, School of Life Science, Beijing, Institute of Technology, Haidian District, Beijing 100081, China*

s18d505@stu.kagawa-u.ac.jp; guo@eng.kagawa-u.ac.jp

***Abstract* - This paper proposed a novel mechanical design method of stability system and structure improvement for the new underwater robot is discussed, and also describes the key technologies and methods in detail of the robot to achieve multiple degrees of freedom. The new robot has ability of adjusting direction and perform specific mission goals. The ANSYS water pressure test and resistance test were performed on the mechanical structure under water intent to evaluate the design rationality of the robot leg and the overall robot. The article also introduced the stability system of the underwater robot and the installation and control method of the servo motors. Finally, the speed and gait stability of the robot underwater and land are analyzed through lots of experiments.**

***Index Terms – Biological inspiration, Amphibious Spherical Underwater Robot, Multifunction Robot, Engineering Simulation (ANSYS)***

## I. Introduction

Nature always gives us some ideas for designing bionic robots, so more and more research institutes are studying the design of bionic robots and apply them on different application field [1]-[2], many studies based on ideas of biological, such as fishes, snakes, tortoise, whales, turtles and others modeled animal robot, which are well adapted to underwater, terrestrial and aerial environments.

The main reason of the two balls in size difference is that the lower hemisphere can be opened and closed quickly by a servo motor. This robot has four legs, every leg contained two front legs and rear legs, like human being and also have movement motion or water-jet motion, all the legs have a braking and water-jet propeller mechanism system, so that the robot can move on terrestrial and aquatic environments. The entire system has ten servo motors and four water jet motors. Among of them, four servo motors are used to control the horizontal direction of the leg which fixed on the middle tray and other four motors control the vertical direction of the leg [3]. The last two motors control the opening and closing of the lower hemisphere. The remaining of four motors are water jet motors.

This study investigates a hemispherical robot which based on the walking movement of tortoise is proposed. The purpose of this designation is mainly to improve the ability of stability when robot move on land and underwater. Compared to quadruped robots. This robot has ability of automatic adjustment, which can make robots stable to complete more difficult tasks when move underwater or on land.

The rest of this paper is organized as follows: an overview of related work, which covers our amphibious spherical robot is presented in Section 2. Introduce the stability control method of the control system in Section 3 Analysis of this robot mechanical structures in Section 4. Section 5 presents the conclusion and suggestions for next generation relevant follow-up research.

## II. Structure Improvement

### *A. The structure of the previous robot in our group*

In previous designs, our team designed a four-legs, bionic robot based on turtle movements to designed a spherical amphibious robot. As shown in Fig.1, the overall design of the robot is spherical, mainly because the sphere can achieve a good degree of freedom when move under water, and the robot can rotate freely under water [4]. The robot is divided into an upper hemisphere and a lower hemisphere. The upper hemisphere is mainly equipped with an electronic control system and the lower hemisphere is mainly equipped with a moving mechanical device. This robot has four freely movable mechanical feet [5]. The eight servomotors are used to control

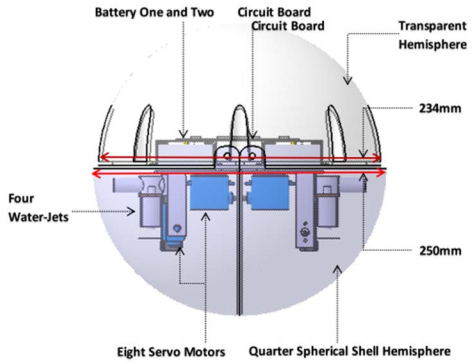


Fig.1 Structure of the amphibious spherical robot

the horizontal and vertical rotation of the robot legs. There are two servo motors on each robot leg. One of them controls the horizontal rotation of the robot leg and the other controls the water jet motor angle. We also designed a spherical robot consisted of a hemispheric upper hull (234 mm in diameter) and two quarter-sphere lower hulls (250 mm in diameter) that can open and close. The upper hull was waterproof and served to protect the internal electronic devices and batteries [6]-[7].

*B. Structure improvement and pressure calculation*

In the previous research, many experiences verified that the structure of the water-jet thrusters is stable and reliable. Based on previously conception, we will keep the basic mechanism of the water-jet thruster to cooperate the propeller thruster. Because of the mechanical limitations of the legs, the water spray system cannot rotate 360 degrees, which affects the stability of underwater robot movement [8]-[9]. In this design, a new water jet system was redesigned.

As shown in Fig.2 and Fig.3, The previous robotic leg design was a sprayer equipped with a water spray device that used a servo motor to control the direction of the entire sprayer. Installation method uses parallel mode. The new design adopts the vertical installation method. The direction of the water spraying device can be arbitrarily controlled by using the servo motor drive shaft.

In order to enable the upper hemisphere to place large-capacity batteries to ensure the robot have cruising ability when move underwater, it is necessary to enable more sensors and control systems, the design of the original upper hemisphere was redesigned mechanically to increase the size.

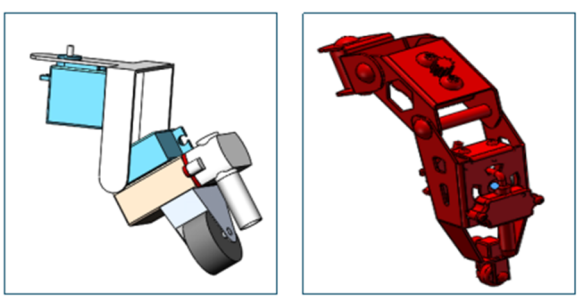

(a) Previous structure (b) New novel move structure

Fig.2 Comparison of two types of leg structure

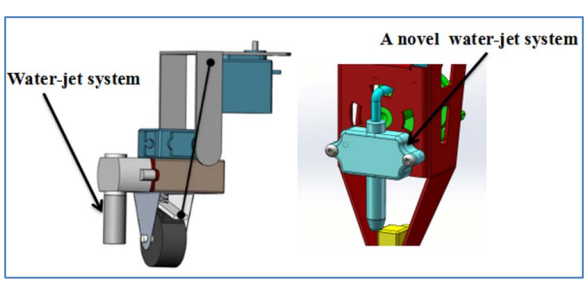


Fig.3 A novel type of water-jet system

Table I
Parameters of the formula

| | |
|---|---|
| Object Resistance | W |
| Scale Factor | C |
| Liquid Density | ρ |
| Diving speed of a moving object | u |
| The area perpendicular direction of movement | F |

In order to enable the upper hemisphere to place large-capacity batteries to ensure the robot have cruising ability when move underwater, it is necessary to enable more sensors and control systems, the design of the original upper hemisphere was redesigned mechanically to increase the ball size.

For a static underwater robot test, the stress on the surface in seawater is easily calculated, according to moving underwater robot, the pressure resistance of the robot should be evaluated during the calculation of the pressure. This kind of organization is effect of eddy currents on the speed of movement to the same objection. According to Newton Resistance Formula, it is easy to get the pressure on the surface of the object, and the pressure resistance must not exceed this value. Assuming that the robot enters the seawater vertically, its resistance can be calculated according to Newton resistance formula [10]-[11]:

$$\mathrm{W} = \mathrm{c}\rho u^2 \mathrm{F} \tag{1}$$

The parameters represent meaning as shown in the following Table I.

According to fluid law, it often orders C= $C_w/2$, So the formula becomes as below:

$$\mathrm{W} = C_w \times (\rho/2) u^2 F \tag{2}$$

*C. ANSYS Workbench simulation*

In this research, the 3D model of propeller is established in CATIA. We can use ANSYS Workbench software to analyze and compare the underwater pressure stress analysis of two kinds of spherical elements [12], so as to obtain the part that the underwater robot should reinforce, and give the final limit dive depth, which lays a solid theoretical foundation for further underwater robot design [13].

In order to enable the upper hemisphere to place large-capacity batteries to ensure the robot have cruising ability when moving underwater, it is necessary to enable more sensors and control systems, the design of the original upper hemisphere was redesigned mechanically to increase the ball size.

According to formula above, F and P relationship, we can assuming that the robot is moving under water for 10 meters, the mass per unit volume of seawater has a seawater density of 1.02 to 1.03 g/cm3 [14]. The density of seawater varies with the temperature, salinity and pressure of seawater. The density of seawater is greater than 1. At a temperature of 20 ‘C at sea level

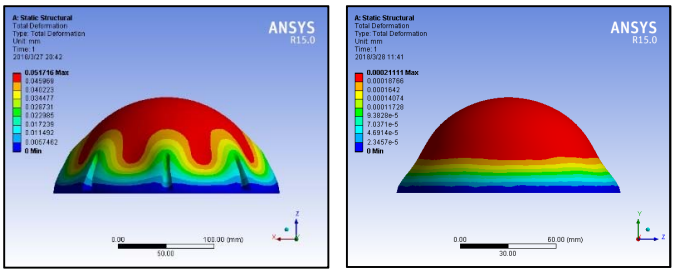


(a) Previous stress simulation (b) New design stress simulation

Fig. 4 The mechanical stress simulation comparative analysis

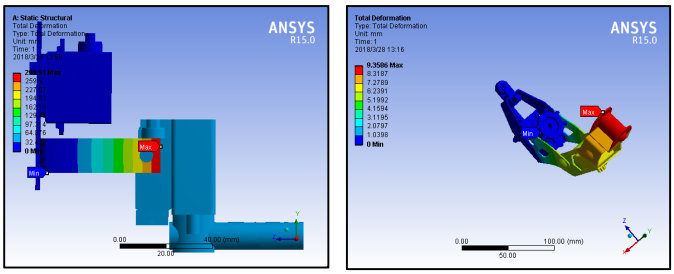


(a) Previous stress simulation (b) New design stress simulation

Fig. 5 Robot legs analysis of the pressure simulation

with a salinity of 35%, the density of seawater is 1.025 g/cm$^3$ [15]-[16], for convenience of calculation, assume that the density of seawater is equal to 1.02 cm$^3$,We can conclude two type robots have different value. Assume that the spherical robot pressure is $F_1$and the hemispherical robot pressure is $F_2$, Assume that the hemisphere of the spherical robot has an area of $S_1$and $S_2$, So we can conclude formula as blow:

$$F_1 = \rho g h S_1 = 1002/m^3 \times 9.8N/KG \times 10\text{m} \times \pi(0.125)^2 = 4.817\text{KPa} \quad (3)$$

$$F_2 = \rho g h S_2 = 1002/m^3 \times 9.8N/KG \times 10\text{m} \times \pi(0.225)^2 = 15.609\text{KPa} \quad (4)$$

According to the obtained pressure data, we will simulate the pressure of the robot under ten meters of underwater and carry out ANSYS software stress test. We will test the upper hemisphere and the mechanical legs to evaluation the water pressure part, the test simulation are shown in the Fig.4 and Fig.5.

## III Stability and Control System

### *A. Amphibious Spherical Robot and stability system*

In order to improve the efficiency of the control system for amphibious spherical robot, we divided the total system into four parts, water-jets system, servo motors system, power supply system and the control system is essential. Four water jet motors are used to provide underwater power for the entire underwater robot. Through the control of the servo motors, we

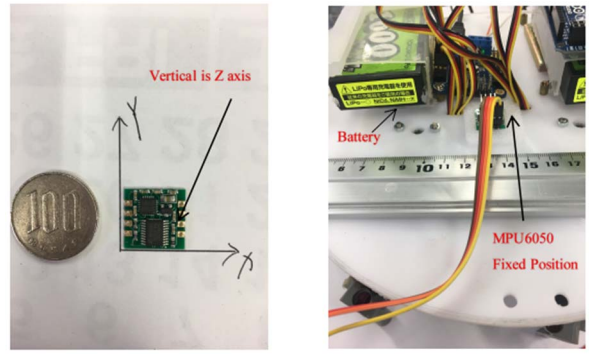


(a) Sensor hardware circuit (b) Sensor position

Fig.6 The stability control system

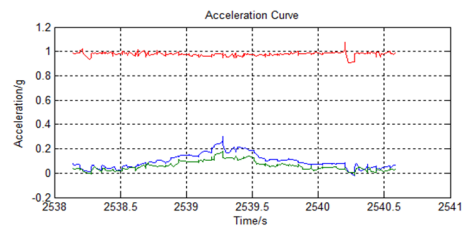


(a) Degree acceleration change analysis

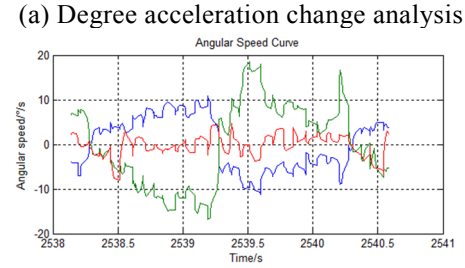


(b) Angular change analysis

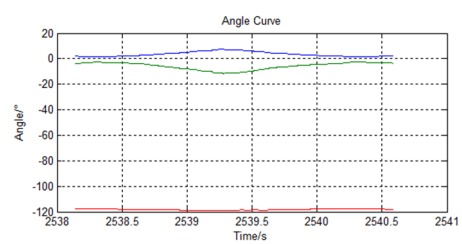


(c) Angle change analysis

Fig.7 Three axes collect data of leg rotates at 45°

can realize to control different angles of amphibious spherical robot. There are nine servo motors in this robot structure, four of them are control the direction of the mechanical leg, other four servo motors are control the direction of the water jet, and the last servo motor is the control of the opening and closing of the lower hemisphere, due to the large number of system servo motors and the system connect of lots of sensors, such as water jets and electronic control circuits, the system requires a stable and more energy storage power supply system. Hence, we designed 8.4v batteries group, battery-one group powered to water jet system and servo motors system, battery-two group powered to control system especially communication systems and stability control systems.so as to isolate power system and

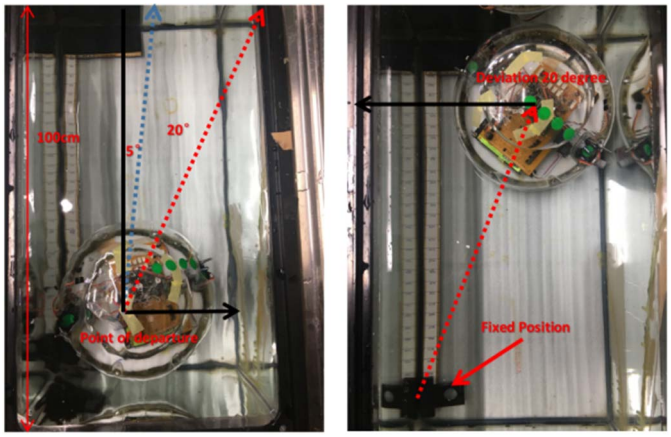


(a) Installed stability module (b) No stability module

Fig.8 Closed-loop stabilization system test

control system and the circuit control board can't let them using common-grounded, we use power ground and digital ground for isolate different signal [17]-[20].

According to the closed-loop principle, the experiment is divided into four states of leg movement for closed-loop control analysis. Due to the lateral limitation of the water jet motor on the leg, under the land mode or underwater movement mode, the maximum of the leg motor and the horizontal direction is 45 degrees. according to the movement of the robot legs, observe the overall robot is the acceleration, angular velocity and angle of the curve, and then gives the corresponding PWM signal to compensate the motor sports mode, so that the movement of the gyroscope will be back to equilibrium status [21].

When the leg inclination angle reach 45 degrees, as shown in the Fig.8, the X-axis and Y-axis accelerations change greatly close to 20 degrees. The main reason is that the tilt angle of the Intermediate tray becomes larger than initial state, but the Z-axis change tends to be flat due to the given pulse frequency. In this way, we need use the PWM compensation, only the X axis and Y axis need to be compensated, so that the stability of the robot is affected. so, PWM pulse signals must to be compensated for signals with different angles to keep stability of spherical robot (The abscissa only indicates the software running time).

Underwater mode experiments were carried out to evaluate loop-control system of the amphibious spherical robot, as shown in the Fig.8, because precise position control is very important for operations and tasks both on land and underwater. Comparing with underwater robots without a closed-loop control system. The design mainly tests the closed-loop control system as the underwater robot travels along a fixed route until reaching the target. According to the changes of the angular speeds of the X-axis, Y-axis and Z-axis, the four water-jet motors under water control are controlled by the pulse width modulation method, so that the robot operation is more stable and efficient.

*B. Hardware circuit design*

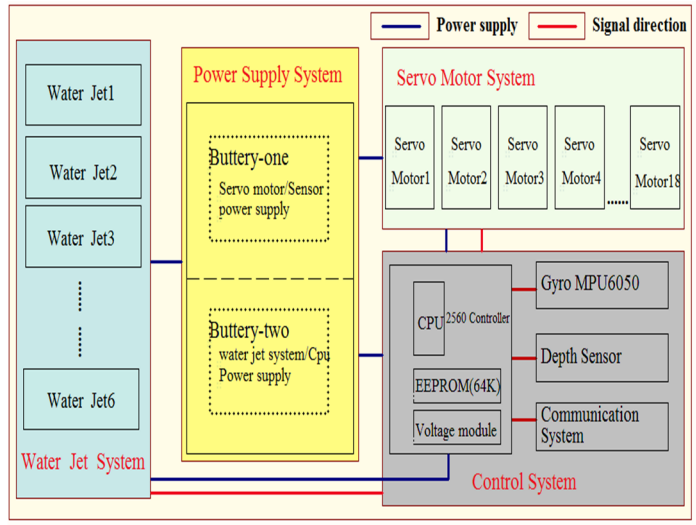


Fig. 9 The electronic control system of the amphibious spherical robot

Due to the limitation of the sphere volume, the main controller selects arduino 2560 as the main controller. Because the Arduino 2560 has 12 PWM signals, it can connect 12 servo motors to control the robot arm of the amphibious robot. The circuit configuration is shown in the Fig.9.

In order to improve the stability and the practical value of amphibious spherical robot, we divided the total system into four parts [22]. Water jet system, servo motor system, power supply system and the control system are also essential. Four water jets motors are used to provide underwater power for the entire underwater robot. Through the control of the servo motor, we can realize to control different angles of amphibious spherical robot. It is nine servo motors in this robot structure, four of them are control the direction of the mechanical arm, other four servo motors are control the direction of the water jet, and the last servo motor is the control of the opening and closing of the lower hemisphere [23]. Due to the large number of system servo motors and this system connect of lots of sensors, water jets, and electronic control circuits, the system requires a stable and more provide lots of energy storage power supply system. Hence, our team designed two parts 8.4-V batteries, two of which(Battery-one) powered to water jet system, and servo motor system. Battery-two powered to control system, in order to isolate dynamic electricity and control system, we can't let them using common-grounded, we use power ground and digital ground for isolate different system.

The electronic and control system contained three parts. Such as gyro sensor, depth sensor and communication system. The microcontroller of 2560 uses RS232 serial communication to communicate with the gyroscope sensors [24]. The gyroscope sensors can control the stability of amphibious robots when the robot move on land and under water. The depth sensor can sense the coordinates of the underwater robot movement [25], so the robot can make corresponding feedback according to the distance from the bottom of the water. The communication system can enable multiple robots to

communicate and transfer data with each other, and this technology can lay a solid theoretical foundation for future research on spherical amphibian robot to release robot multi-communication and cooperation. Therefore, the purpose of underwater communication of robots can be achieved point-to-point communication method. With an effective system, the robot can also perform multi-robot collaboration tasks.

## IV Experimental Results

Analytical results obtained from ANSYS software, including both elastic stress and deformation. our previously designed robots, the current robots were subjected to static pressure testing under seawater for 10 meters. we choose 10 meters for testing because of the multiple tests, the depth of 10 meters is the critical range deformation of the two shells. Applying static mechanical pressure of 4.817 kappa to the previous robot, Apply a pressure of 15.609 kappa to the new design robot. The stress test results for the new robot. From results, it can be seen that due to the different surface area of the shell, the pressure different and the depth is different, the deformation is also different.

Furthermore, we performed 4 MPa stress tests on the two robots. The test results showed that the legs of the new robot had no performance under large pressure due to the relatively complex leg structure compared with the leg of the previously designed robot.

## V Conclusion

This paper presented a new type of amphibious spherical robot and the design method of a novel robot. It also carries out detailed comparative analysis of the mechanical design system, electronic control system and stability system of the new robot. At the last, we use the mechanical analysis software ANSYS to carry on the static comparative analysis of the components that the robot mainly undertakes pressure when talking about the next movement. After several tests, a 10m seawater environment was selected for mechanical evaluation and the final experimental conclusion was given.

## Acknowledgment

This research is partly supported by National High Tech. Research and Development Program of China (No.2015AA043202), and SPS KAKENHI Grant Number 15K2120.

## References

[1] Y. He, S. Guo and L. Shi, “3D Printing technology-based an Amphibious Spherical Underwater Robot”, Proceedings of 2014 IEEE international conference on mechatronics and automation, pp.1382-1387, 2014.

[2] S. Guo, Y. He, L. Shi, S. Pan, R. Xiao, K. Tang and P, Guo, “Modeling and experimental evaluation of an improved amphibious robot with compact structure”, Robotics and Computer–Integrated Manufacturing, vol. 51, pp. 37-52, 2018.

[3] S. Guo, S. Pan, X. Li, L. Shi, P. Zhang, P. Guo and Y. He, “A system on chip based real-time tracking system for amphibious spherical robots”, International Journal of Advanced Robotic Systems, vol. 14, no. 4, pp. 1-19, 2017.

[4] C. Yue, S. Guo and L. Shi, “Design and Performance Evaluation of Biomimetic Microrobot for the Father-son Underwater Intervention Robotic System”, Microsystem Technologies, vol. 22, no. 4, pp. 831-840, 2015.

[5] Y. Li, S. Guo and C. Yue, “Preliminary Concept and Kinematics Simulation of a Novel Spherical Underwater Robot”, Proceedings of 2014 IEEE International Conference on Mechatronics and Automation, pp. 1907-1912, 2014.

[6] X. Lin, S. Guo, C. Yue and J. Du, “3D Modelling of a Vectored Water Jet-Based Multi-Propeller Propulsion System for a Spherical Underwater Robot”, International Journal of Advanced Robotic Systems, vol. 10, no. 1, pp. 1-8, 2013.

[7] H. Ren, C. Bai, Q. Kong, M. Baptista and C. Grebogib, “A chaotic spread spectrum system for underwater acoustic communication”, Statistical Mechanics and its Applications, vol.478, no. 3, pp. 77-92, 2017.

[8] F. Yuan, Q. Wei and E. Cheng, “Multiuser chirp modulation for underwater acoustic channel based on VTRM”, International Journal of Naval Architecture and Ocean Engineering, vol. 9, no. 3, pp. 256-265, 2017.

[9] Y. Li, S. Guo and C. Yue, “Preliminary concept and kinematics simulation of a novel spherical underwater robot”, Proceedings of 2014 IEEE International Conference on Mechatronics and Automation, pp 1907-1912, 2014.

[10] Q. Pan, S. Guo and T. Okada, “A Novel Hybrid Wireless Microrobot”, International Journal of Mechatronics and Automation, International Journal of Mechatronics and Automation, vol. 1, no. 1, pp. 60-69, 2011.

[11] D. Scaradozzi, G. Palmieri, D. Costa and A. Pinelli, “BCF Swimming Locomotion for Autonomous Underwater Robots: A Review and a Novel Solution to Improve Control and Efficiency”, Ocean Engineering, vol. 130, pp. 437-453, 2017.

[12] K. Wang, Liu and Y Li, “Visual servoing trajectory tracking of nonholonomic mobile robots without direct position measurement”, IEEE Transactions on Robotics, vol. 30, no. 4, pp1026-1035, 2014.

[13] L. Shi, Y. He, S. Guo, Kudo. H, M. Li and Asaka.K (2013), “IPMC actuator-based a movable robotic Venus flytrap”, Proceedings of 2013 ICME international conference on complex medical engineering (ICME 2013), pp 375-378, 2013.

[14] C. Yue, S. Guo and L. Shi, “Hydrodynamic Analysis of the Spherical Underwater Robot SUR-II”, International Journal of Advanced Robotic Systems, vol. 10, no. 5, pp. 1-12, 2013.

[15] C. Yue, S. Guo, Y. Li and M. Li, “Bio-Inspired Robot Launching System for a Mother-Son Underwater Manipulation Task”, Proceedings of 2014 IEEE International Conference on Mechatronics and Automation, pp. 174-179, 2014.

[16] Y. Li, S. Guo and C. Yue, “Study on the Control System of a Novel Spherical Underwater Robot”, Proceedings of 2015 IEEE International Conference on Mechatronics and Automation, pp. 2100-2105, 2015.

[17] Y. Li, S. Guo and Y. Wang, “Design and Characteristics Evaluation of a Novel Spherical Underwater Robot”, Robotics and Autonomous Systems, vol. 94, pp. 61-74, 2017.

[18] S. Guo, S. Mao, L. Shi, Y. He, S. Su, Z. Chen and X. Hou, “Development of an Amphibious Mother Spherical Robot Used as the Carrier for Underwater Microrobots”, Proceedings of the International Conference on Complex Medical Engineering (ICME), pp. 758-762, 2012.

[19] H. Xing, S. Guo and L. Shi, “Hybrid Locomotion Evaluation for a Novel Amphibious Spherical Robot”, applied sciences, vol. 8, no. 2, pp. 156-174, 2017.

[20] M. Li, S. Guo, H. Hirata and H. Ishihara, “A roller-skating/walking mode-based amphibious robot”, Robotics and Computer-Integrated Manufacturing, vol. 4, pp. 17-29, 2017.

[21] J. Guo, S. Guo and L. Li, “Design and characteristic evaluation of a novel amphibious spherical robot”, Microsystem Technologies, vol. 23, pp. 1999-2012, 2017.

[22] S. Guo, Y. He, L. Shi, S. Pan, K. Tang and P. Guo, “Modal and fatigue analysis of critical components of an amphibious spherical robot”, Microsystem Technologies, pp. 2233-2247, no. 6, 2017.

[23] Y. He, L. Shi, S. Guo, S. Pan and Z. Wang, “Preliminary mechanical analysis of an improved amphibious spherical father robot”, Microsystem Technologies, vol. 22, no. 8, pp. 1-16, 2016.

[24] S. Pan, L. Shi and S. Guo, “A Kinect-Based Real-Time Compressive Tracking Prototype System for Amphibious Spherical Robots”, Sensors, vol. 15, no. 4, pp. 8232-8252, 2015.

[25] S. Gu and S. Guo, Performance Evaluation of a Novel Propulsion System for the Spherical Underwater Robot (SURIII). Applied Sciences, vol. 7, no. 1, pp. 1196-1214, 1, 2017.