Proceedings of 2018 IEEE
International Conference on Mechatronics and Automation
August 5 - 8, Changchun, China

# Characteristic Evaluation of the Shell Outlet Mechanism for a Magnetic-actuated Screw Jet Microrobot in pipe

Zixu Wang*1

*1Graduate School of Engineering, Kagawa University

Takamatsu, Kagawa 761-0396, Japan

s18d501@stu.kagawa-u.ac.jp

Shuxiang Guo*2*3, Wei Wei*1

*2Key Laboratory of Convergence Medical Engineering System and Healthcare Technology, The Ministry of Industry and Information Technology, School of Life Science and Technology, Beijing Institute of Technology, Haidian District, Beijing 100081, China

*3Department of Intelligent Mechanical Systems Engineering, Kagawa University, Takamatsu, Kagawa 761-0396, Japan

guo@eng.kagawa-u.ac.jp

***Abstract* – This paper carried out series of simulations and experiments for the characteristic evaluation of a Magnetic Actuated Screw Jet Microrobot (SJM), we can get the conclusion and contribution of the best characteristic of shell outlet by this paper, and make a great progress of microrobot design by analyzing the results. The first part in this paper is some information about background and related research of the capsule microrobots, there are some problems or disadvantages of proposed microrobots also the design concept of our research will be put forward, as for the second section, it is introducing the structure design of SJM, we will show the details and give the research purpose of this paper. Then we will introduce the 3-axis Helmholtz coils, it is the power module in this research, the driving principle and propulsive force theory are also been shown in this section. Finally, the last part is about simulation setup and experiment of outlet size, combining the simulation results and experimental results, we will discuss the optimal choice of the design by the simulation in an ideal environment and the comparison of experimental results.**

***Index Terms – Magnetic actuated microrobot, rotating magnetic field, simulation.***

## I. Introduction

The traditional cabled endoscope has been applied for many years, there are also many disadvantages of conventional endoscopes, such as it will cause injury to the human's intestine, bring discomfort to the patients and there are some limitations of the cable, the cable makes the patients uncomfortable and it also can not achieve a long distance surgery due to the intestine of the human body because it is about 6.5- 8 meters. Simultaneously, there are many narrow places in the intestinal, its wired design also limits that it is difficult to reach the depths in the human body. But capsule robot has the advantages that traditional cabled endoscope does not have noninvasive surgery, wireless and smaller volume. At present, the actuation of capsule robots is mostly dependent on intestinal tract peristalsis, or dragging forward by external magnetic field, the former detection time is too long and can not achieve backward motion, also the dragging motion will take pain to the patient.

At present, the functions and moving methods of capsule robots are mostly depended on the target area in the gastrointestinal area, some of these types of robots' motion functions are relatively simple, as a tool for diagnosis and treatment, microrobots can be used for tasks such as drug delivery and complex surgical operation.

However, there are still many shortcomings in the developed robots, for the cable type, the cable can supply the energy for the microrobot but it is also the biggest disadvantage. The wireless capsule robot also has the shortcomings, for example, the energy supply problems during surgery, or it can not achieve multi-direction movement or even get reach narrow issue in the human body. In addition, the wireless robot movement is depended on human's bowel movement, the time from swallowing to excretion will cost about 24 hours [1]-[3].

The developed capsule microrobots have an obviously shortcoming, the rotating structure will take some injure or discomfort to the patients when the robots moving in humans' intestinal [4]-[9]. So the SJM was developed to overcome this problem, we added a shell to the outside of the rotating structure to isolate it from directly contacting with the human's intestinal. However, this type of robot has just been developed, its parameters and the relationship between motion performances has not been analyzed yet, such as the relationship between motion performance and different pitch numbers or different moving conditions [10]-[13].

## II. Structure Design of Screw Jet Microrobot

The internal structure of our microrobot is shown in the Fig. 1. Each part of the robot has been identified. Comparing to the previously developed SJM, we added a shell outside the new type SJM, its usefulness is avoiding the direct friction in human intestine when the microrobot is rotating. Certainly, the addition of the shell will take a lot of impact on the movement. That's the reason we have to experiment and re-evaluate the effects of changes in some of the parameters in the experimental section.

When the robot is running in the human intestine, the propulsive force is produced by the water which is rotated out by screw, at the same time, there will be other forces, such as hydraulic resistance, friction, component force of buoyancy and gravity[14]-[18]. According to Newton's second law, we derive the following formula:

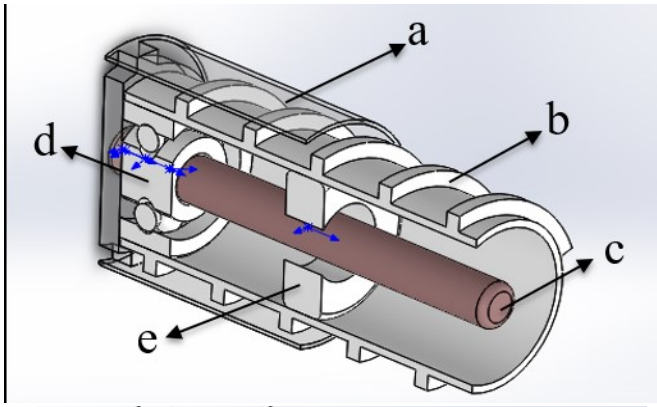


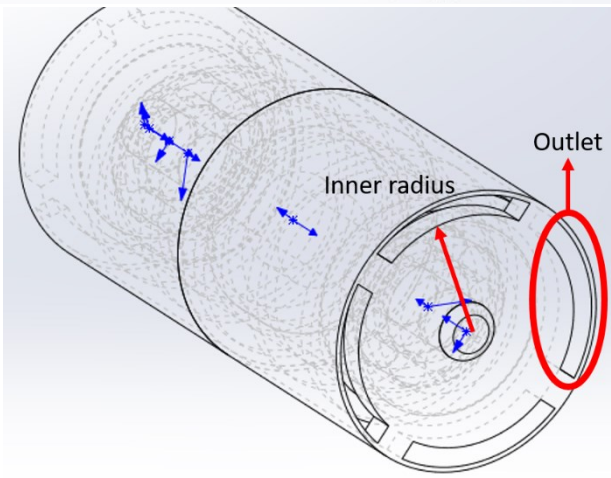


(a. Shell, b. Screw, c. Shaft, d. Bearing, e. O-ring type magnet)
Fig. 1 Structure design of SJM

$$F_P - F_D \pm F\sin\theta \pm G\sin\theta + m\frac{dv}{dt} = 0 \quad (1)$$

where F is buoyancy, $F_D$ is hydraulic resistance, $F_P$ is the propulsive force, G is gravity force, m is the mass of microrobot, v is speed. θ is the angle between the microrobot's movement direction and the horizontal direction. When the microrobot moves inside the pipe, which is completely filled by the liquid, the liquid passes one end side of the microrobot and leaves the other end side of the microrobot at the same time. Since the liquid is incompressible, the volume of liquid through any perpendicular plane in any interval of time must be the same everywhere in the microrobot. Considering the inflow area and outflow area of the microrobot whose cross-sectional area are inflow area $A_1$ and outflow area $A_2$. The volume of liquid passing through the inflow area is equal to the volume of liquid passing through the outflow area for unit time, to give equation(2):

$$\mathrm{Q} = \mathrm{A}_1 V_1 = A_2 V_2 \quad (2)$$

where, Q is the flow of screw jet motion, $V_1$ is the inflow velocity of the area $A_1$ and $V_2$ is the outflow velocity of the area $A_2$. The propulsive force is defined by equation(3):

$$F_p = \rho Q V_2 = \rho Q \times \frac{Q}{A_2} = \rho\frac{Q^2}{A^2} \quad (3)$$

*where* $F_p$ is the propulsive force, ρ is the density of liquid.

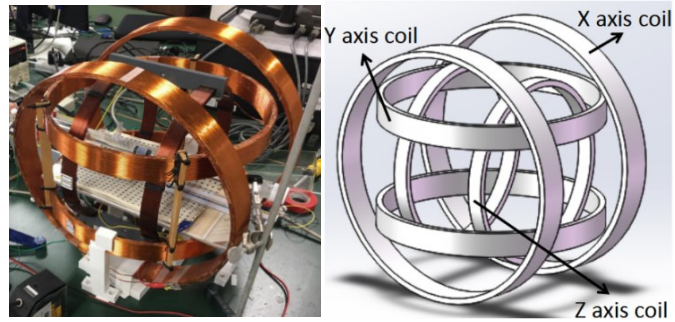


(a) Practicality photo (b) Simulation model
Fig. 2 Three-axis Helmholtz coils

TABLE I
3-AXIS HELMHOLTZ COIL PARAMETERS

| | Turns N | Coil radius r(mm) | Distance d(mm) | Resistance R(Ω) |
|---|---|---|---|---|
| X axis | 125 | 142 | 150 | 2.4 |
| Y axis | 150 | 175 | 175 | 3.3 |
| Z axis | 180 | 200 | 200 | 4.5 |

## III. MAGNETIC FORCE AND MAGNETIC TORQUE

When the microrobot running in pipe which has a magnet as an actuator inside driven by an external magnetic field, the propulsive force and torque are provided by the external magnetic field. The microrobot can rotate due to the magnetic torque T. The magnetic force F and magnetic torque T acting on the magnet inside the external magnetic field generated by the 3-axes Helmholtz coils is given by the equations (4):

$$\mathrm{T} = \mathrm{VM} \times \mathrm{B} \quad (4)$$

where, B is magnetic flux density, M is the magnetization of the magnet and V is the volume of the magnet.

We developed driving systems to realize wireless automatically locomotion of the microrobot. Proposed driving system, it provides power for the movement of the microrobots and working environment. The specific rotation principle of the magnetic field has been discussed in the previous paper.

To ensure that the robot in the pipe in different directions of the same force and torque, we need a controllable magnetic field in 3-dimensional space, the role of 3-axes Helmholtz coils is to provide the power of rotation for wireless microrobot, shows in Fig. 2. In addition, the parameter of each axis has shown in TABLE I.

There is a couple of coils on each axis, the center distance of each pair of coils are denoted by L. When L is equal to radius R, and the current in each pair is the same. The formula for magnetic flux density is shown in equation (5).

$$\mathrm{B} = \begin{bmatrix} B_x \\ B_y \\ B_z \end{bmatrix} = \begin{bmatrix} a\cos(\omega t)\cos\alpha & 0 & 0 \\ 0 & b\cos(\omega t)\cos\gamma & 0 \\ 0 & 0 & c\cos(\omega t)\cos\beta \end{bmatrix} \begin{bmatrix} I_x \\ I_y \\ I_z \end{bmatrix} \quad (5)$$

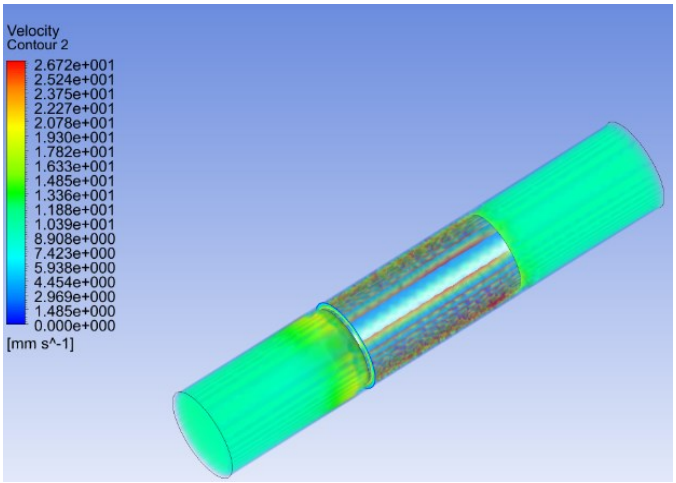


Fig.3 Simulation model and simulation results on velocity

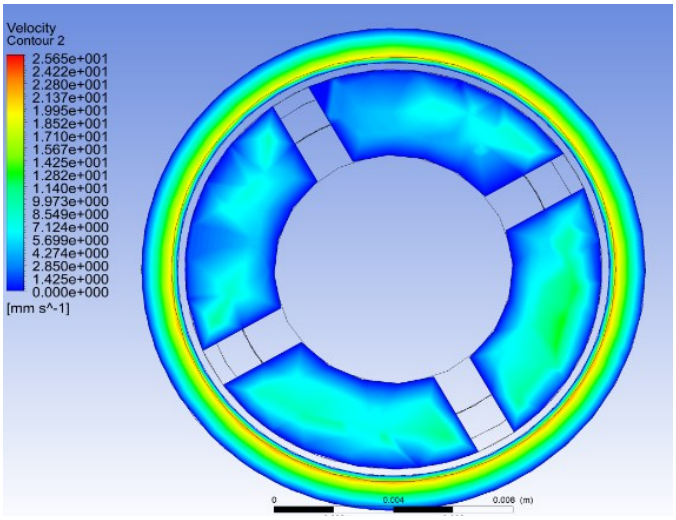


Fig.4 Simulation result on velocity with 4mm inner radius

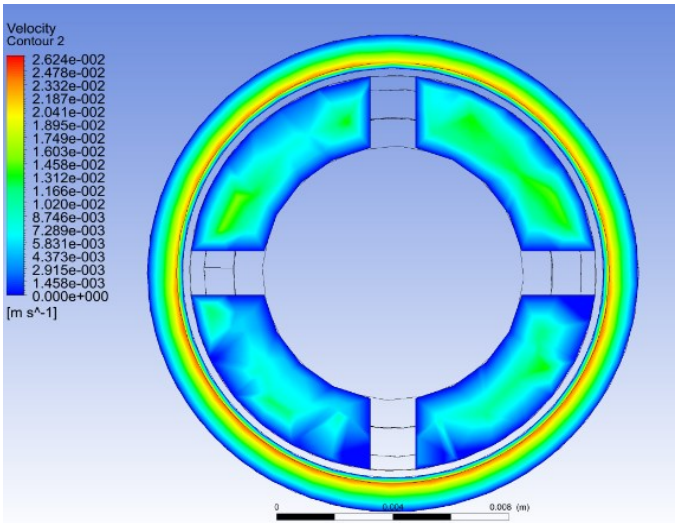


Fig.5 Simulation result on velocity with 4.5mm inner radius

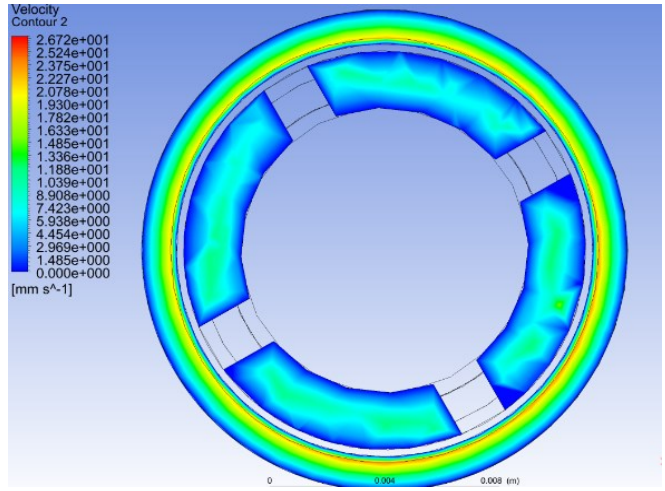


Fig.6 Simulation result on velocity with 5mm inner radius

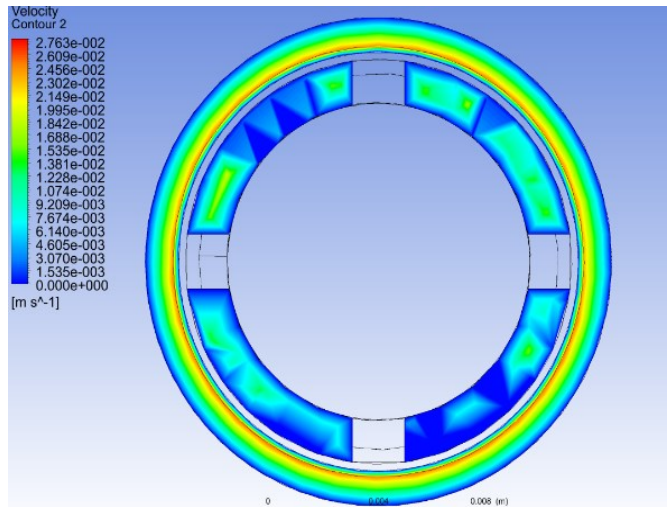


Fig.7 Simulation result on velocity with 5.5mm inner radius

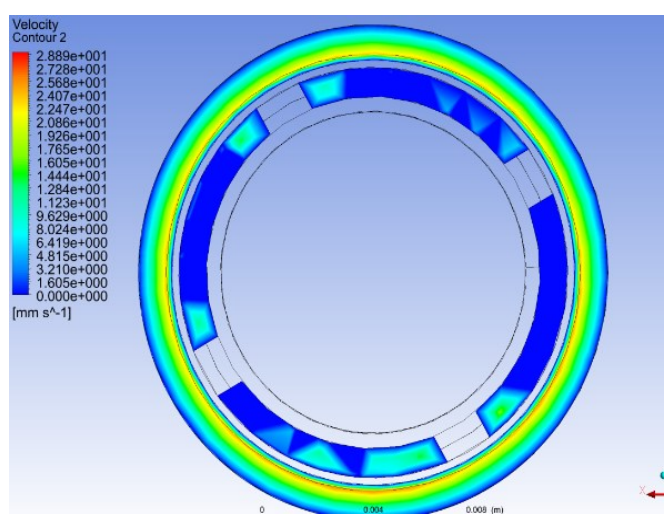


Fig. 8 Simulation result on velocity with 6mm inner radius

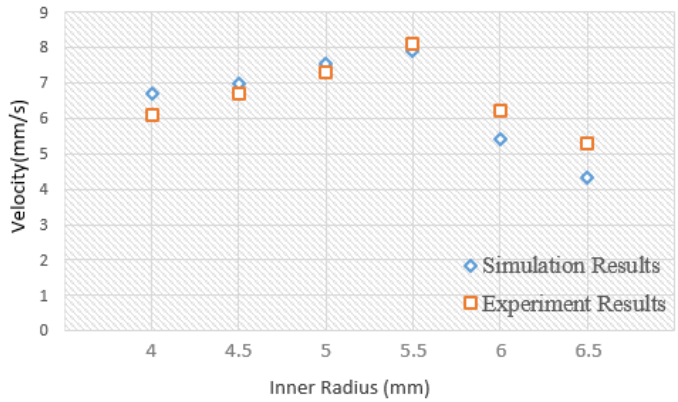


Fig.9 Outlet velocity comparison of simulation results

TABLE II
AVERAGE OUTLET VELOCITY

| Inner radius | Simulation results of different outlet inner radius |
|---|---|
| 4mm | 6.70816mm/s |
| 4.5mm | 6.98805mm/s |
| 5mm | 7.55492mm/s |
| 5.5mm | 7.89429mm/s |
| 6mm | 5.40993mm/s |
| 6.5mm | 4.34813mm/s |

where $B_x$(t), $B_y$(t), and $B_z$(t) denote the magnetic flux density of the x-, y- and z- axes, respectively; $\alpha$, β, and γ denote the angles between the moving direction of the microrobot and x-, y-, and z-axes, respectively; a, b, and c are constant of three axes Helmholtz coils.

## IV. EXPERIMENTAL AND SIMULATION RESULTS

This section introduces the development of the shell part. The gap on the shell is used for the water that flows into the interior of the robot, then the size of the inlet and outlet will affect the robot's inflow area and outflow area which takes the influence on inlet and outlet quality. As mentioned before, when the microrobot moves inside of the pipe, the inlet quality is equal to outlet quality at the same time.

The simulation results on velocity of outlet section are shown in Fig.3. to Fig.8. and TABLE II are for different outlet velocity simulations. The result was simulated by ANSYS 17.0 CFX, in Geometry section, we changed the inner radius from 6.5mm to 4mm (Radius R=7mm) to evaluate the influence of the size. During the simulation we set a plane on the outlet part, and carried out the data of outlet velocity for each setting, from the simulation results and experimental results which have shown in Fig.9, the velocity is showing an increasing trend, but the 6mm-6.5mm's radius velocity begins to decrease. The 5.5mm inner radius has the peak velocity, however, there are some limitations of our 3D printer such as the accuracy, finally we chose 5mm inner radius using on our robot's shell.

According to equation (6) and (7),

$$\mathrm{Q} = \mathrm{A}_1 V_1 = A_2 V_2 = \frac{1}{2}\pi(R^2 - r^2)L - C \qquad (6)$$

$$\mathrm{V} \propto \frac{1}{r^2}, \quad r \in [4.5, 6] \qquad (7)$$

where R is the radius of shell, r is the inner radius of the shell, C is the volume of screw, by this equation, Q, A, V are three variables, Q is proportional to V. When r belongs to the 4.5-6 interval, the curve of V is decreasing more and more slowly. In the case of same flow, which means if we want to get a higher velocity, the slope of the curve should be decreased. That means when the flow is constant, a smaller cross-sectional area of the robot shell will show higher velocity.

Certainly, we can also see in the experiment that its velocity will start to decline at some point. The reason just as people hold water pipes outlet part to spray water, the velocity will become faster, but when the outlet space is too small, the water pipe will become unstable or will not flow out of water.

## V. CONCLUSION

We developed a Screw Jet Microrobot that can achieve multi-direction function without injuring human's intestine. This type microrobot is driven by 3- axes Helmholtz Coils which can provide a rotating uniform magnetic field. With the development of our research, we met some problems and solved them. For instance, the previous papers have proposed this type of screw jet microrobot and evaluated the motion performance [4]-[9], we have also evaluated the influence of different pitch. We also have analyzed the driving device, principle and movement characteristics, and discussed the effect on different flow [16]. And this paper introduced a wireless capsule Screw Jet Motion microrobot and its working principle based on previous system. The main work in this paper is to evaluate the effect of outlet size of the shell on velocity, the first part is about the relative research in recent years and listed some shortcomings of them, as for the second section, we showed the design and principle of SJM and the research purpose in this paper is to evaluate the influence of the outlet size on the shell module, then we have chosen the fastest solution for the average flow rate at the inlet and outlet. Although the simulation part is an ideal state, we did not consider the friction generated by the internal rotation of the robot itself, because this force has a negligible impact on propulsion force.

In the simulation progress of experiment, we evaluated the effect on inner radius of the shell, according to the equation (6), (7), we explained the increase and decrease of the velocity, and this simulation verifies our previous theory that speed will not infinitely be increasing, because the variable flow is inversely proportional to the cross-sectional area.

During the progress of experiments, the results were carried out in a real-world environment, there are many parameters that affect the experimental results, such as the robot production accuracy, that's the reason why the difference existing in the experimental results and simulation results, we will focus on the problems in the future works.

## ACKNOWLEDGMENT

This research was supported by National High-Tech. Research and Development Program of China (No. 2015AA043202), and SPS KAKENHI Grant Number 15K2120.

## REFERENCES

[1] S. Guo, T. Fukuda and K. Asaka, "Fish- like underwater microrobot with 3 DOF", Proceedings of IEEE International Conference on Robotics and Automation, Vol.1, pp. 738- 743, 2002.

[2] S. Guo, T. Fukuda and K. Asaka, "A new type of fish-like underwater microrobot", IEEE/ ASME Transactions on Mechatronics, Vol. 8, No. 1, pp.136-141, 2003.

[3] Sehyuk Yim, "Design and Rolling Locomotion of a Magnetically, Actuated Soft Capsule Endoscope", IEEE Transactions on Robotics, VOL. 28, No.1, pp. 183-194, 2012.

[4] Qiang Fu, Shuxiang Guo, "A Control System of the Wireless Microrobots in Pipe", Proceedings of 2014 IEEE International Conference on Mechatronics and Automation, pp. 1995- 2000, 2014.

[5] Shuxiang Guo, Qiang Fu, "Characteristic Evaluation of a Wireless Capsule Microrobotic System", Proceedings of 2013 IEEE International Conference on Mechatronics and Automation, pp. 831- 836, 2013.

[6] Qiang Fu, Shuxiang Guo, Songyuan Zhang, "Characteristic Evaluation of a Shrouded Propeller Mechanism for a Magnetic Actuated Microrobot", Micromachines, Vol. 6, No.9, pp.1272- 1288, 2015.

[7] Qiang Fu, Shuxiang Guo, "Development and Evaluation of Novel Magnetic Actuated Microrobot with Spiral Motion Using Electromagnetic Actuation System", Journal of Medical and Biological Engineering, Vol. 36, No. 4, pp. 506-514, 2016.

[8] Qiang Fu, Shuxiang Guo, Songyuan Zhang, "Performance Evaluation of a Magnetic Microrobot Driven by Rotational Magnetic Field", Proceedings of 2015 IEEE International Conference on Mechatronics and Automation, pp.876-880, 2015.

[9] Qiang Fu, Shuxiang Guo, "Design and Performance Evaluation of a Novel Mechanism with Screw Jet Motion for a Hybrid Microrobot Driven by Rotational Magnetic Field", Proceedings of 2016 IEEE International Conference on Mechatronics and Automation, pp.2376- 2380, 2016.

[10] Arcese, L., Fruchard, M., Ferreira, A, "Adaptive controller and observer for a magnetic microrobot", IEEE Transactions on Robotics, Vol. 29, No.4, pp. 1060- 1067, 2013.

[11] Lee, J. S., Kim, B., & Hong, Y. S., "A flexible chain-based screw propeller for capsule endoscopes", International Journal of Precision Engineering and Manufacturing, Vol. 10, No.4, pp. 27- 34, 2009.

[12] Peyer, K. E., Zhang, L., Nelson, B. J., "Bio-inspired magnetic swimming microrobots for biomedical applications", Nanoscale, Vol.5, No.4, 2013.

[13] Kim, S. H., Ishiyama, K., "Magnetic Robot and Manipulation for Active-Locomotion With Targeted Drug Release", IEEE/ ASME Transactions on Mechatronics, Vol. 19, No.5, 2014.

[14] T. Okada, S. Guo, Q. Fu and Y. Yamauchi, "A Wireless Microrobot with Two Motions for Medical Applications", Proceedings of the 2012 ICME International Conference on Complex Medical Engineering, pp. 306-311, 2012.

[15] T. Okada, S. Guo, X. Nan, Q. Fu, Y. Yamauchi, "Control of the Wireless Microrobot with Multi-DOFs Locomotion for Medical Applications", Proceedings of 2012 IEEE International Conference on Mechatronics and Automation, pp. 2405-2410, 2012.

[16] Shuxiang Guo, Zixu Wang, Qiang Fu, "Motion Performance and Evaluation of a Magnetic Actuated Screw Jet Microrobot", Proceedings of 2017 IEEE International Conference on Mechatronics and Automation, pp.2000-2004, 2017.

[17] Qiang Fu, Shuxiang Guo, Jian Guo, "Conceptual Design of a Novel Magnetically Actuated Hybrid Microrobot", Proceedings of 2017 IEEE International Conference on Mechatronics and Automation, pp.1001-1005, August 6-9, Takamatsu, Japan, 2017.

[18] Shuxiang Guo, Qiuxia Yang, Luchang Bai, Yan Zhao, "Development of Multiple Capsule Robots in Pipe", Micromachines, Vol.9, No.6, 2018