Proceedings of 2020 IEEE
International Conference on Mechatronics and Automation
October 13 - 16, Beijing, China

# Study on Delay and Accuracy of Control System for the Vascular Interventional Surgical Robot based on Fuzzy PID and Improved Smith Algorithms

Jian Guo[1], Zixiang Zhuang[1]

*1Tianjin Key Laboratory for Control Theory & Applications in Complicated Systems and Intelligent Robot Laboratory*
*Tianjin University of Technology*
*Binshui Xidao 391, Tianjin, China*

*jianguo@tjut.edu.cn；*

*707863976@qq.com;*

Shuxiang Guo[1,2*]

*2 Department of Intelligent Mechanical Systems Engineering, Faculty of Engineering*
*Kagawa University*
*2217-20, Hayashi-cho, Takamatsu 761-0396, Japan*

**Corresponding author: guo@eng.kagawa-u.ac.jp；*

**Abstract- In vascular interventional surgical robot, performance of displacement is one of the criteria for evaluating whether the robot's system can safely complete the operation. However, there is a pure time delay phenomenon which caused by motor of the slave side and also the data processing for the robot's system. These factors will reduce the control performance of the vascular interventional surgical robot and even cause the system is unstable, which makes the analysis of the system very complicated. In order to this situation, this paper proposed an algorithm combining fuzzy PID and improved smith estimation compensation, which reduces the error and time delay of vascular interventional surgical robot caused by time delay and improves the following ability of master and slave vascular interventional surgical robot. Finally, this paper verified the effectiveness of the algorithm through the tracking experiment of master-slave's tracking experiment. It showed the improved algorithms can improve the real-time and accuracy of the control system for the robot.**

***Index Terms- Hysteresis system, Control system time delay, Fuzzy PID, Improved smith compensation, Tracking error***

## I. INTRODUCTION

Cardiovascular and cerebrovascular disease is a big problem in the world, and interventional surgery is the principal method and means for the treatment and diagnosis of cardio-cerebrovascular diseases. It is of great practical significance to develop a vascular interventional surgical robots. Most of the structures are master-slave structures including master-side manipulators, master-side controllers, master-side PCs, slave-side actuators, slave-side controllers, slave-side PCs. It used some protocols based on TCP/IP for long-distance communication. Because of the telecommunication of the master-slave structure, it has a certain hysteresis in the system itself, and some non-linear factors belong to the hysteresis system. From the perspective of the tracking effect of the master and slave, there will be a certain phenomenon of delay in driving data. When there is a time delay in a system, it will reduce the control effect and produce a larger error. At the same time, it will cause the system to respond slowly and reduce the stability of the system. At present, there are many teams and scholars at home and broad engaged in the research of vascular interventional surgical robots. Foreign research started earlier and developed countries started at the forefront of the world.

In 2012, Tianjin University completed the animal experiments of laparoscopic surgery with Beijing Second Artillery General Hospital and Tianjin University based on the Internet with their "MicroHands". By analyzing the total delay of the surgical system, the system has a delay of about 290.3ms caused by time delay and the delay for control system itself can be adopted by doctor[1]. In remote vascular intervention surgery, the maximum delay that the doctor can adapt to the system is 300ms. This is the conclusion of many scholars in this field. It is a common default feasibility in the telemedicine field .Yinging Tang solve the problem of time-delay caused by lagging system and the problem of the mismatch of the estimated model, it improved the compensation structure of the control system, and added the estimated model to the controller node and the actuator node separately. It carried out simulation experiments, and analysis is improved smith algorithm can increase response speed, accuracy , stability of control system, and solve the impact caused by the model mismatch[2]. Wang Zi Peng et proposed a fuzzy time-delay parabolic model for a nonlinear time-delay parabolic partial equation system and designs a fuzzy control of sampled data with time-varying gain. Through simulation verification, this control algorithm can be used for slow changing delay or rapidly changing delay[3].

To deal with the poor control effect due to time delay in a control system for vascular interventional surgery, it rasied the hybrid algorithm based on improved smith compensation and the fuzzy PID. This chapter is consisted of five sections. The first part is the research status and its introduction. The second part is an introduction to the platform for robot. The third part is the simulation of compensation control. The fourth part is the study of the experiment's analysis. The last part is the conclusion of the article and the future work of the team.

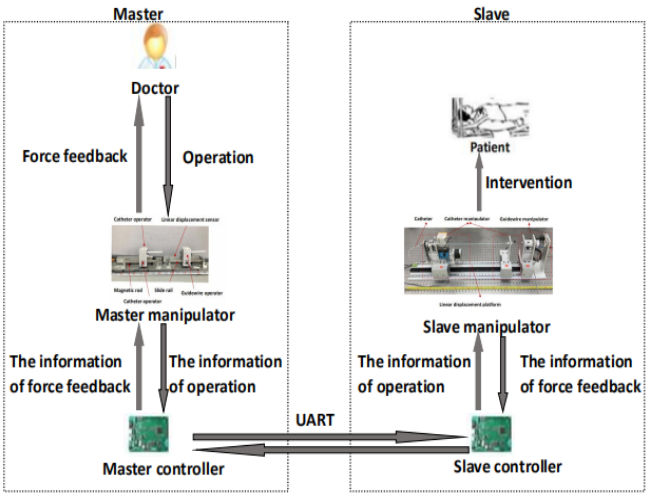


Fig.1 The overview of control system

## II. The Master-Slave Vascular Interventional Surgical Robotic System

To protect the doctor the doctor's body from harsh operating environment, a surgical robot for the intervention is accomplished in this laboratory. The fig 1 is structure of this robot. It includes a master-slave operator, two controllers on the two sides, two Arduino microcontrollers on the master-slave side[4-5]. The catheter guidewire manipulator was operated, the linear displacement sensor measures the displacement data of the catheter and guidewire, the photoelectric encoder collects the displacement of the rotating part, and the Arduino on the master-slave sends the collected linear displacement of the guidewire catheter to the master-slave's controller with UART. The master's controller sends collected control data to the slave's controller. The control data received by the slave controller is processed by the algorithm with Arduino, which further drives the motor to move the corresponding distance and rotation which the size of the angle. At the same time, the force feedback data recorded on the pressure sensor side of the slave robot will also be sended to the master side through the UART. The manipulator of the master side will display the force feedback transmitted from the slave site through Arduino which presented resistance on the force feedback device with the transmitted force data.

The master manipulator includes two parts in fig 2, left side is a catheter operation part, and the right side is a guide wire operation part. Doctors operate catheter guidewires separately to achieve push, pull, and rotate operations during surgery. Two linear displacement sensors are used to measure the axial displacement. The range of the linear displacement sensor is 35cm. Two incremental rotary encoders are used to measure the rotational displacement. This encoder is 2500 lines. The length of the linear slide is 20cm. The force feedback structure is a coil array and a magnetic rod. The coil is suspended on the magnetic rod through the support tube, and the coil is connected to the input voltage to generate a

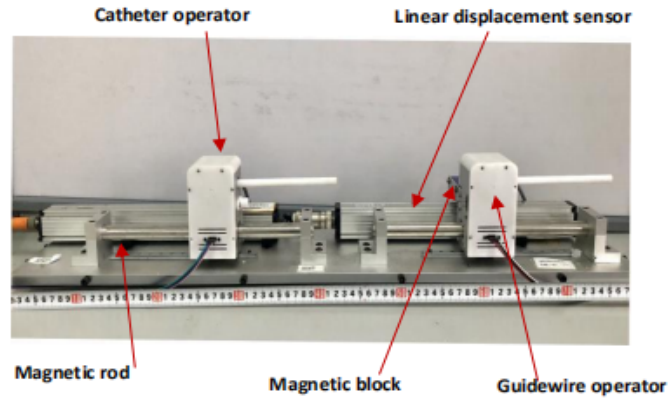


Fig.2 The structure of the master manipulator

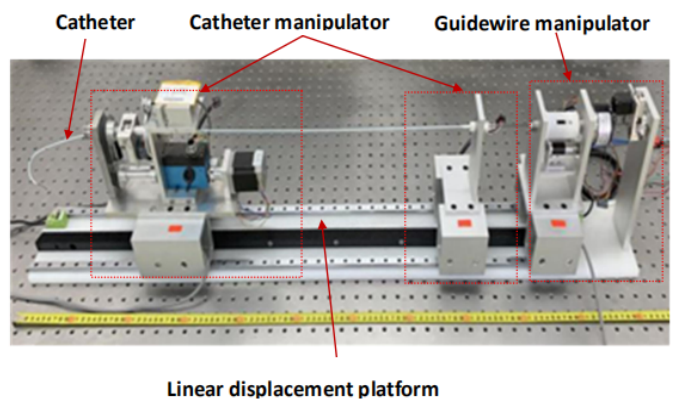


Fig.3 The structure of the slave manipulator

magnetic field and generate a force with the magnetic rod structure, thereby achieving the effect of force feedback [6].

The fig 3 describes the designed of the slave robot. From the end, there are two pushing mechanisms that push the catheter guide wire separately. The incremental rotary encoder measures the rotation angle.The driving data is collected into the controller through serial communication, and the slave motor is driven by the controller to achieve the effect of master-slave tracking.

At the same time, a pressure sensor is used to measure the collision force. The clamp at the rear end is used to clamp the catheter to cooperate with the guide wire movement [7].

## III. The Design Of Improved Smith And Fuzzy PID Controller

### A. *Design of improved smith controller*

Because the master-slave interventional surgical robot adopts control, the control data is sent and received by cluster communication port between the master and slave robots. This will cause a time delay in the control system due to factors [8]. The movement of the motor itself is also a purely delay system, a certain time delay phenomenon. These two factors will cause a certain amount of delay time and error in the tracking of the displacement and rotation of the master and

slave robots. In response to this problem, this paper designed the following control algorithm, using fuzzy PID and improved smith compensation hybrid algorithm, to solve some control systems caused by time delay and delay of the controlled motor of slave robot impact.

The fig 4 is the structure of a classic master and slave control system.Sensor nodes are time-driven, the controller and the slave motor nodes are event-driven, and $C(s)$ is transfer function of the controller. Generally, PID control is used. $G(s)$ for the transfer function model of slave motor, $e^{-\tau s}$ is the time delay for system.

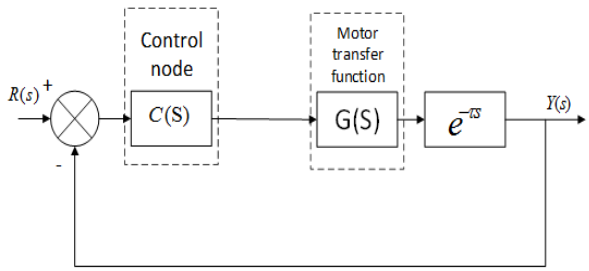


Fig.4 The structure of the vascular interventional surgical robot

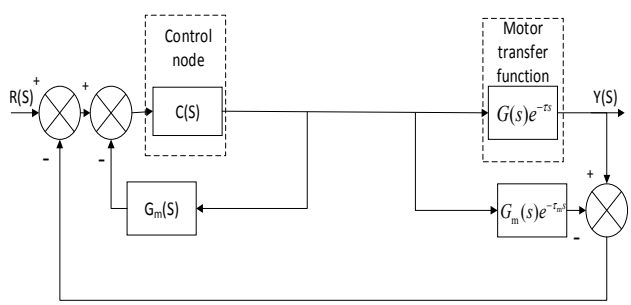


Fig.5 Control system of robot based on improved smith compensation

Closed-loop transfer function of control system for master-slave intervention surgery can be obtained according to formula (1):

$$\frac{Y(s)}{R(s)}=\frac{C(s)G(s)e^{-\tau s}}{1+C(s)G(s)e^{-\tau s}} \tag{1}$$

Closed-loop characteristic function can be obtained according to formula (2):

$$1+C(s)G(s)e^{-\tau s}=0 \tag{2}$$

Aiming at the delay in both a pure time delay phenomenon which caused by motor of the slave side and also the data processing for the vascular interventional robots, this paper used an improved smith compensation algorithm to reduce the instability caused by delay [9]. Its control structure is shown in fig 5.

Closed-loop transfer function of control system for master-slave intervention surgery's function can be obtained according to formula (3):

$$\frac{Y(s)}{R(s)}=\frac{C(s)G(s)e^{-\tau s}}{1+C(s)G_m(s)+C(s)(e^{-\tau s}G(s)-e^{-\tau_m s}G_m(s))} \tag{3}$$

Closed-loop characteristic function can be obtained according to formula (4):

$$1+C(s)G_m(s)+C(s)(e^{-\tau s}G(s)-e^{-\tau_m s}G_m(s))=0 \tag{4}$$

When this paper add the compensation model $G_m(s)$ to the controller and the controlled object, and set $G_m(s)=G(s)$, closed-loop transfer function of the control system is as follows (5):

$$\frac{Y(s)}{R(s)}=\frac{C(s)G(s)e^{-\tau s}}{1+C(s)G(s)} \tag{5}$$

The equivalent control effect structure diagram is as follows fig 6:

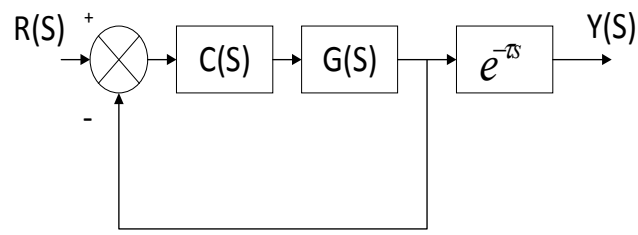


Fig.6 The simplified structure of the vascular interventional surgical robot

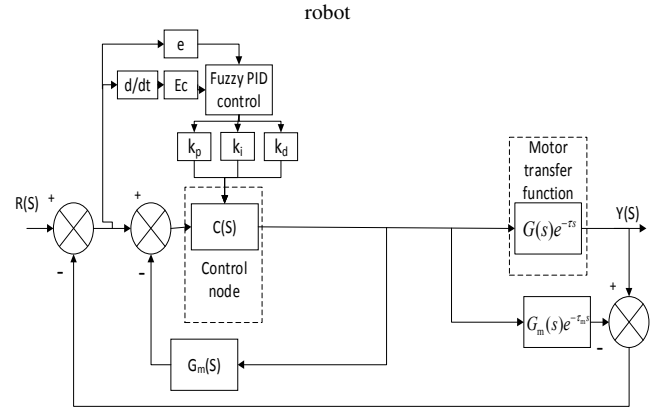


Fig.7 Control system of robot based on fuzzy PID and improved smith algorithm

## B. *Design of fuzzy PID controller*

In the control of vascular interventional surgery, the motion of the slave robot motor itself is non-linear and complex. The estimated motor motion model is difficult to completely match. Based on the improved smith estimation compensation, a fuzzy PID algorithm is added the three coefficients of PID can be adaptively adjusted according to the master-slave following error and change rate for itselves to

improve system performance[10-11]. The fig 7 is control structure diagram.

Online automatic tuning of the PID parameters is achieved by using fuzzy inference because there is a interference in the motion of the slave robot motor, which is a non-linear motion, and it is not possible to accurately establish a mathematical model. The fixed motion model does not match, so on the basis of the parameters set by the PID, this paper can use the fuzzy controller to automatically modify the $k_p$, $k_i$ and $k_d$ to make it better adaptive[12]. Let $\Delta k_p$, $\Delta k_i$, $\Delta k_d$ is the output, $k_p^{'}$, $k_i^{'}$, $k_d^{'}$ are base values given by the PID tuning, then the PID controller parameters $k_p$, $k_i$, $k_d$ are

$$k_p = \Delta k_p + k_p^{'} \tag{6}$$

$$k_i = \Delta k_i + k_i^{'} \tag{7}$$

$$k_d = \Delta k_d + k_d^{'} \tag{8}$$

Parameters of Fuzzy-PID algorithm can be adjusted. Combined with the system operating conditions and previous experience, the fuzzy control rules of, $\Delta k_p$, $\Delta k_i$, $\Delta k_d$ are summarized in Table 1, 2 ,3[13-15].

In fuzzy controller, the system $e$, $Ec$ as the input of the controller, their domains are {-3,-2,-1,0,1,2,3}.At the same time, their fuzzy set is {NL, NM, NS, ZE, PS, PM, PL}, It is different degrees of membership with light to heavy, and three parameters of $k_p$, $k_i$, $k_d$ are {PL, PM, PS, ZE}, It is also different degrees of membership with light to heavy , and the domain is {0,1,2,3}. If value of the error is big, it need to have a large $k_p$ and a small $k_d$ to speed up the response. If value of the error is relatively small, smaller $k_p$ and $k_i$ are needed to improve stability. If value is medium, it needed appropriate $k_p$ and $k_d$ to reduce overshoot.

It can be seen from the fig 8 that the estimated compensation structure designed in the article can compensate the control system delay and the pure delay of the slave motor. The pure time delay of the motor T1 are closed loop. Moved to the outside of the closed-loop of the feedback channel, further eliminating the impact of pure motor delay time on system stability, thereby improving the control effect of the entire system. It performed a simulation of the control algorithm as shown in fig 8. It assumed the $k_p = 4, k_i = 0.041, k_d = 2.67$ , $e = 2, Ec = 0.3$ ,the time delay of the control system is T1=T2=T3=0.05ms, Sampling period is T = 100s. Transfer function of the motor is(9):

$$G(S) = \frac{10}{2S^2 + 3S + 1} \tag{9}$$

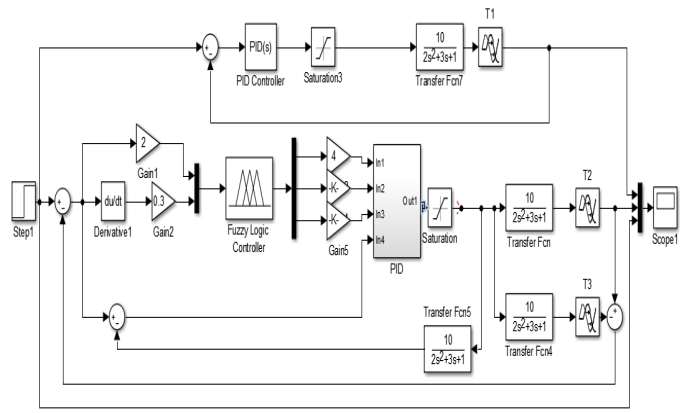


Fig.8 Simulation experiment diagram

TABLE I

$\Delta k_p$ Fuzzy control rule table

| e \ Ec | NL | NM | NS | ZE | PS | PM | PL |
|---|---|---|---|---|---|---|---|
| **NL** | PL | PL | PM | PS | PM | PL | PL |
| **NM** | PL | PL | PM | ZE | PM | PL | PL |
| **NS** | PL | PM | PS | ZE | PS | PM | PL |
| **ZE** | PL | PM | PS | ZE | PS | PM | PL |
| **PS** | PL | PM | PS | ZE | PS | PM | PL |
| **PM** | PL | PL | PM | ZE | PM | PL | PL |
| **PL** | PL | PL | PM | PS | PM | PL | PL |

TABLE II

$\Delta k_i$ Fuzzy control rule table

| e \ Ec | NL | NM | NS | ZE | PS | PM | PL |
|---|---|---|---|---|---|---|---|
| **NL** | ZE | PS | PL | PL | PL | PS | ZE |
| **NM** | ZE | PS | PL | PL | PL | PS | ZE |
| **NS** | ZE | ZE | PM | PL | PM | ZE | ZE |
| **ZE** | ZE | ZE | PM | PL | PM | ZE | ZE |
| **PS** | ZE | ZE | PM | PL | PM | ZE | ZE |
| **PM** | ZE | PS | PL | PL | PL | PS | ZE |
| **PL** | ZE | PS | PL | PL | PL | PS | ZE |

TABLE III

$\Delta k_d$ Fuzzy control rule table

| e \ Ec | NL | NM | NS | ZE | PS | PM | PL |
|---|---|---|---|---|---|---|---|
| **NL** | PS | PS | PM | PL | PM | PS | PS |
| **NM** | PS | PS | PM | PL | PM | PS | PS |
| **NS** | PS | PM | PL | PL | PL | PM | PS |
| **ZE** | PS | PM | PL | PL | PL | PM | PS |
| **PS** | PS | PM | PL | PL | PL | PM | PS |
| **PM** | PS | PM | PL | PL | PL | PM | PS |
| **PL** | PS | PS | PM | PL | PM | PS | PS |

It can be seen from fig 9 that the PID algorithm is a red line and the fuzzy PID and improved smith algorithm is a black line. The fuzzy PID and improved smith algorithm has a smaller overshoot. The time to enter steady state is shorter.The control system of interventional surgical robot, It adopt fuzzy PID and improved smith algorithm, which can better adapt to the non-linear situation and pure delay in the control system, and make the control system more stable and accurate fast and

adaptive.

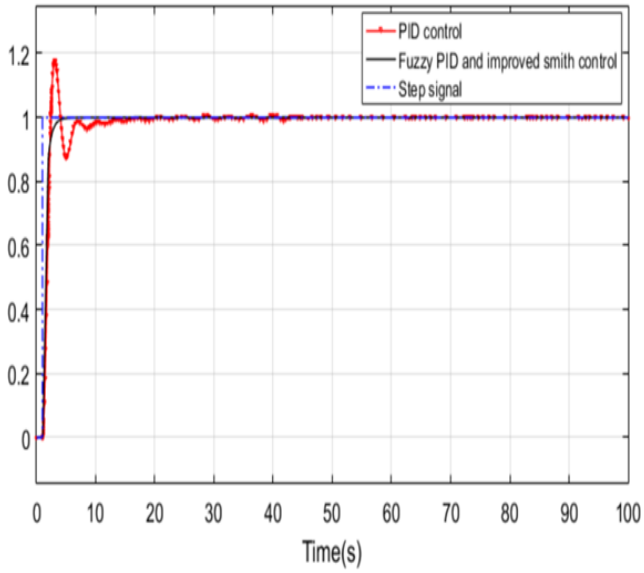


Fig.9 Simulation effect diagram

## IV. EXPERIMENTAL RESULTS

### A. *The design of experiment*

To verify the effectiveness of fuzzy PID and improved smith algorithms, this paper conducted a experiment of master-slave's linear displacement for a pure time delay phenomenon which caused by motor of the slave side and also the data processing for the vascular interventional surgical robots.

This paper designed and builded the experimental platform in the fig 10. When operated the master manipulator, slave manipulator followed the movement. The movement is measured by NDI. Master and slave communicate through serial port, and the maximum sampling time is 60 data per second by setting the sampling interval, it can be accurate to 0.16ms to collect a data, collected 30s of motion data, occasionally intercept the data of 1s and observe its real-time. All the operations of master and slave follow linear motion.

### B. *Analysis of results*

In fig 11 is experiment of linear displacement that the time delay of this system is about 45-50 ms and the average error is about 0.56mm with PID in fig 12. This is because of the effect of the pure hysteresis of the motor itself and the nonlinear motion of the motor. After adding the improved control algorithm, the experimental results of interventional robot is in fig 13. Sampling the following amount of 30s again, intercepting the following amount of 1s arbitrarily, the system delay is reduced to 20-25ms in fig 13 and the average error is reduced to 0.33mm in fig 14, which greatly improves real-time and accuracy of master-slave interventional surgical robot.

## V. CONCLUSIONS AND FUTURE WORK

Due to existence of pure time delay in the control system, it designed the fuzzy PID and improved smith algorithms for the control system of robot to deal with influence of these factors.

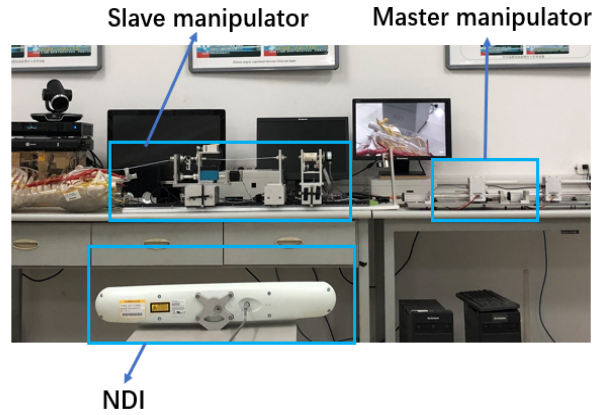


Fig.10 Structure of the master and slave manipulator

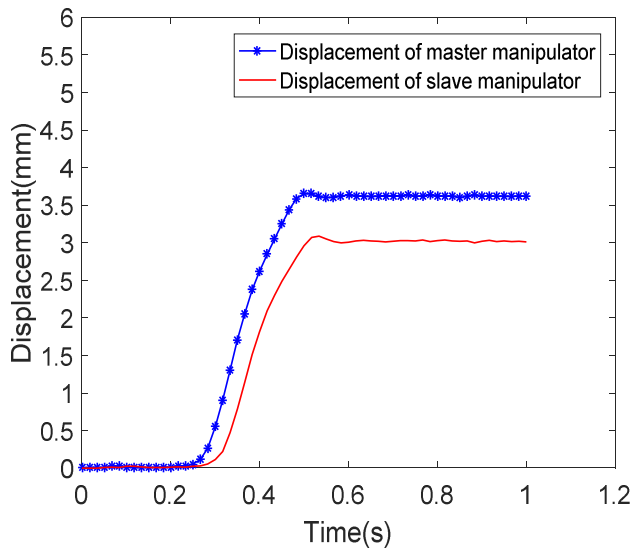


Fig.11 Displacement tracking curve

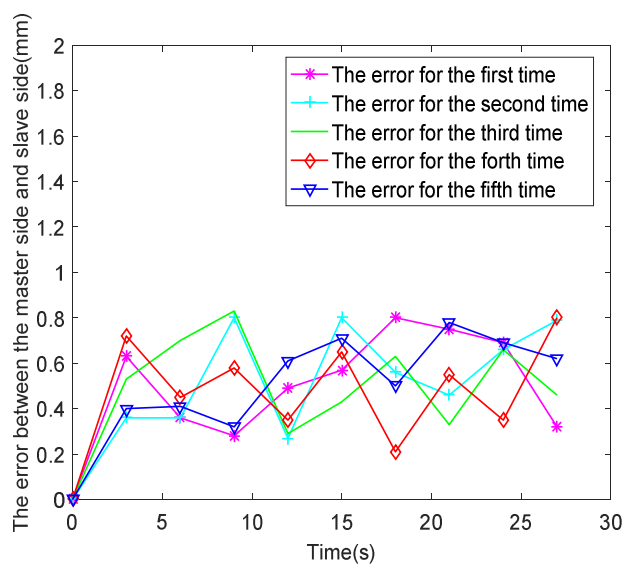


Fig.12 The error between master side and slave side

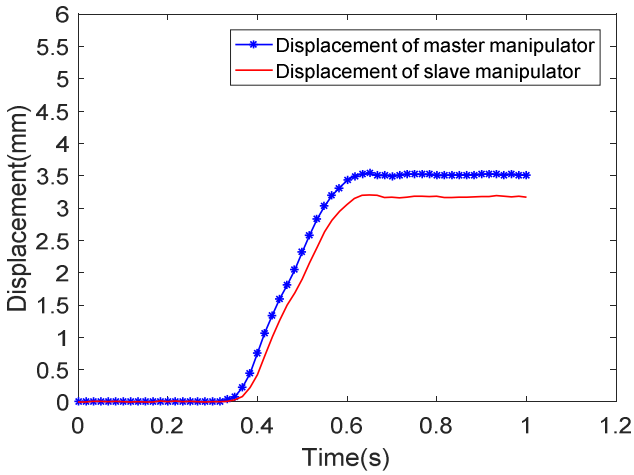


Fig.13 Displacement tracking curve with improved algorithm

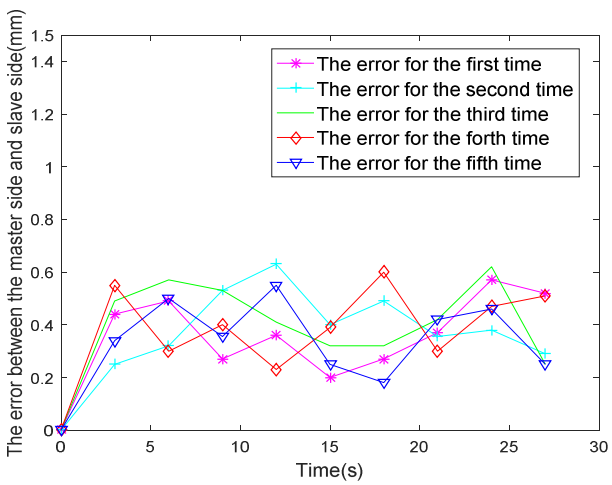


Fig.14 The error between master side and slave side with improved algorithm

The hybrid algorithm and simulation experiments are performed. This hybrid algorithm enhanced the stability of the system. It better realized the follow-up effect of the master-slave robot displacement too. This paper verified the effectiveness of the designed algorithm for the pure delay problem existing in the slave robot motor itself and data processing for the vascular interventional surgical robot with the experimental. From the experimental results, It can see that algorithms improved the real-time and accuracy of the robot.

In future work, the fuzzy PID and improved smith algorithms are used to verify the effectiveness of the hybrid algorithm under the double delay situation of network delay and pure delay of the control system.

## ACKNOWLEDGEMENTS

This research is supported by National Natural Science Foundation of China (61703305), Key Research Program of the Natural Science Foundation of Tianjin (18JCZDJC38500) and Innovative Cooperation Project of Tianjin Scientific and Technological (18PTZWHZ00090).

## REFERENCES

[1] Wei Wang , Jianming Li , Shuxin Wang . System design and animal experiment study of a novel minimally invasive surgical robot. The International Journal of Medical Robotics and Computer Assisted Surgery, vol.12, no.1, pp.73-84, 2016

[2] Yingqing Tang , Feng Du , Yani Cui . New Smith predictive fuzzy immune PID control algorithm for MIMO networked control systems. Eurasip Journal on Wireless Communications & Networking, vol.2018, no.1, 2018

[3] Zipeng Wang, Huaining Wu, Xiaohong Wang. Sampled-data fuzzy control with space-varying gains for nonlinear time-delay parabolic PDE systems. Fuzzy Sets & Systems, pp170-194,2019

[4] Jian Guo, Cheng Meng, Shuxiang Guo, Xiaoliang Jin and Changping Sun. A Novel Vascular Interventional Surgeon Training System with Cooperation between Catheter and Guidewire."Proceedings of the 2018 IEEE International Conference on Robotics and Biomimetics, pp.1471-1476, Kuala Lumpur, Malaysia, 2018

[5] Jian Guo , Xiaoliang Jing , Shuxiang Guo . Study of the Operational Safety of a Vascular Interventional Surgical Robotic System. Micromachines, , vol.9,no.3,pp.119-131,2018

[6] Shuxiang Guo ,Qi Zhan; Jian Guo; Cheng Meng; Lei Qi. A Novel Vascular Interventional Surgeon Training System with Cooperation between Catheter and Guidewire, Proceedings of 2019 IEEE International Conference on Mechatronics and Automation, pp.1403-1408, August 4-7,Tianjin，China, 2019

[7] Jian Guo, Cheng Meng, Shuxiang Guo, Qiang Fu, Qi Zhan, Lei Qi. Design and Evaluation of a Novel Slave Manipulator for the Vascular Interventional Robotic System. Proceedings of 2019 IEEE International Conference on Mechatronics and Automation, pp.1350-1355, August 4-7, Tianjin，China, 2019

[8] He Su , Jianhua Li , Kang Kong, et al. Development and experiment of the Internet-based telesurgery with MicroHand robot. Advances in Mechanical Engineering, vol.10,no2, ,2018

[9] Ailian Li, Feng Yue. Application of fuzzy Smith intelligent control in automatic control system of cone crusher. 2012 24th Chinese Control and Decision Conference, Taiyuan China, pp.2783-2787, 2012

[10] Jian Guo, Xiaoliang Jing, Shuxiang Guo, Wenxuan Du . Study on the Tracking Performance of the Vascular Interventional Surgical Robotic System Based on the Fuzzy-PID Controller. Proceedings of 2017 IEEE International Conference on Mechatronics and Automation, pp.29-34, August 6-9, Takamatsu, Japan, 2017

[11] Shuxiang Guo, Rui Shen, Nan Xiao, Xianqiang Bao, Changqi Xu, A Study on Telecommunication Technology and Remote-control Algorithm In Minimally Invasive Surgical Robotic System. Proceedings of 2017 IEEE International Conference on Mechatronics and Automation, pp.485-490, August 6-9, Takamatsu, Japan, 2017

[12] Yanpeng Wu, Ying Wu.A Novel Predictive Control Scheme with an Enhanced Smith Predictor for Networked Control System. Automatic Control & Computer Sciences, vol.52,no.2, pp.126-134, 2018

[13] Bonala Sathyam , Subudhi Bidyadhar , Ghosh Sandip . On delay robustness improvement using digital Smith predictor for networked control systems. European Journal of Control, vol.34, no.Mar, pp.59-65, 2017

[14] Chen Guo, Jingen Liu, Shipeng Han.. Research on Variable Universe Fuzzy PID Control Based on Catheter Robot, Application Research of Computers, Vol.35.No.2,pp.471-482, 2018

[15] Shuxiang Guo, Yangming Guo, Xianqiang Bao, Cheng Yang. A PID-type Fuzzy Logic Controller for an Interventional Surgical Robot, Proceedings of 2019 IEEE International Conference on Mechatronics and Automation, pp.2529-2533, August 4-7, Tianjin,China, 2019